LVS Lighting Specification

Model Name	**LV-DB2-186X31-L2835-SL-30MA-SW**		
COLOR OPTION	SW (WHITE)		
Wattage	21.6W		
Number of LED	180EA (SMD LED)		
Channels	1		
Lifetime	70% lumen after 30,000 hours		
Voltage OPTION	DC 12V / DC 24V		
Signal Polarity	12V – 1 : Anode (+) White / 2 : Cathode (–) Black 24V – 1 : Anode (+) White / 3 : Cathode (–) Black		
Ext. Material	Aluminum	Cable Length	0.5m
Input Connector	12V : SMR-02V-B x 1Piece , 24V : SMR-03V-B x 1Piece		
Operation Temp./Humidity	Temperature : 0 to 40ºC, Humidity : 20 to 85%RH		
Keep Temp./ Humidity	Temperature : -20 to 60ºC, Humidity : 20 to 85%RH		

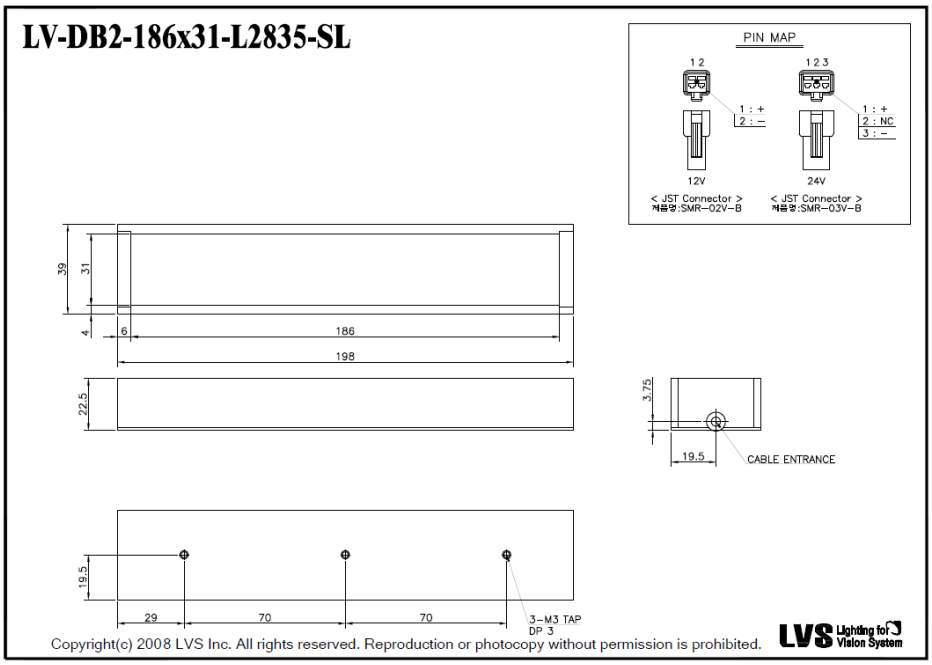

Heat Dissipation	Natural air cooling [Special heat-dissipating structure]
Power Supply	PWM Method Constant On: LVS-PN-SERIES (256 level control , RS-232C Supported) STROBE Controller : LVS-PS-2124 (200W , 2CH , On time 0.2㎲ ~ 1㎳)
Annotation	